Dimensions

GKS□□-3M H□R

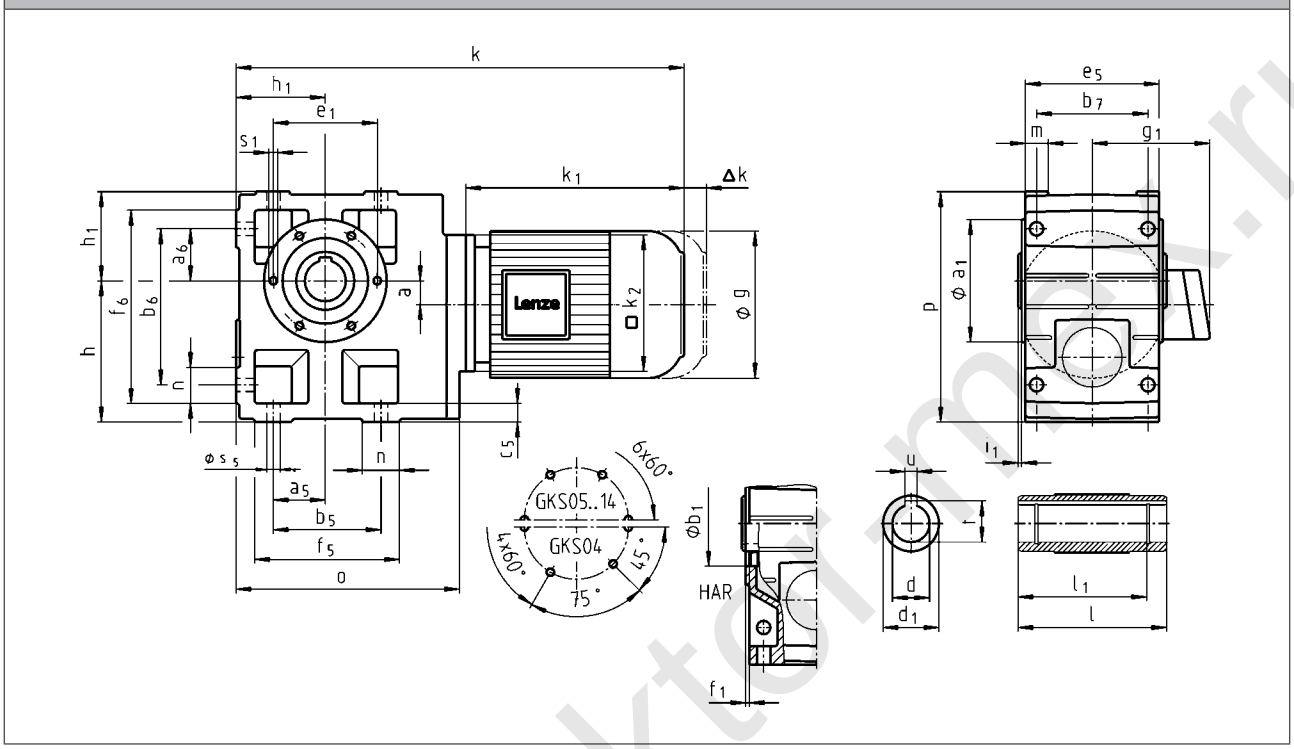

		063C11 063C12 063C31 063C32	063C42	071C11 071C13 071C31 071C32 071C33 071C42	080C11 080C13 080C31 080C32 080C33 080C42	090C11 090C31	090C32	100C12 100C31 100C32 100C41
g		123		139	156	176		194
g_1	MDEMAXX	100		109	150	157		166
	MDEMABR	107		118	132	137		147
k_1	MDEMAXX	187		207	224.5	274	248	309
k_2		120			145	180		
Δ k	MDEMABR	40		52	73	68		76
	MDFMAXX	128						109
	MDFMABR	170		165	183	181		170
					k			
	GKS04	399		419	441	501	475	
	GKS05		419	439	461	521	495	556
	GKS06		475	495	517	577	551	612
	GKS07				573	633	607	668
	GKS09					704	678	739
	GKS11							830

www.redukt-max.ru

		112C22 112C31	112C32 112C41	132C21 132C22 132C32	160C22	160C32	180C12 180C32	180C42	225C12 225C22
g		218		258	310		348		447
g_1	MDEMAXX	176		195	210		230		346
	MDEMABR	158		187	210		230		346
k_1	MDEMAXX	319	363	403	457.5	501.5	561	618	848
k_2		222		265	300				
Δ k	MDEMABR	90		109.5	105		113		
	MDFMAXX	102		115	149			155	213
	MDFMABR	183		201.5	179		215		213
		k							
GKS06		628	672						
GKS07		684	728	776	835	879			
GKS09		755	799	847	906	950	1010		
GKS11		846	890	938	997	1041	1101	1158	1388
GKS14		945	989	1037	1096	1140	1200	1257	1487

	a	h[1)]	h_1	o	p[1)]
GKS04	20	100	71	203	171
GKS05	23	125	80	232	205
GKS06	28	150	100	291	250
GKS07	34	190	120	354	310
GKS09	41	236	150	429	386
GKS11	54	300	185	527	485
GKS14	67	375	230	636	605

	d	d_1	l[1)]	l_1	u	t	i_1	a_1	b_1	e_1	f_1	s_1
	H7				JS9	+0,2			H7			
GKS04	25 30	45 45	115 115	100 100	8 8	28.3 33.3	2.5 2.5	104	75	90	3	M6x12
GKS05	30 35	50 50	140 140	124 124	8 10	33.3 38.3	4 4	118	80	100	4	M8x15
GKS06	40 45	65 65	160 160	140 140	12 14	43.3 48.8	5 5	140	100	120	4	M10x16
GKS07	50 55	75 75	200 200	175 175	14 16	53.8 59.3	5 5	165	115	140	5	M12x18
GKS09	60 70	95 95	240 240	210 210	18 20	64.4 74.9	5 5	205	145	175	6	M16x24
GKS11	70 80	105 105	290 290	250 250	20 22	74.9 85.4	6 6	240	170	205	6	M20x32
GKS14	100	135	350	305	28	106.4	7	290	170	250	6	M24x35

	a_5	a_6	b_5	b_6	b_7	c_5	e_5	f_5	f_6	m	n	s_5
GKS04	45	45	110	119	85	14	105	132	141	21	22	9
GKS05	47.5	47.5	115	140	105	17	115	144	169	21	29	11
GKS06	60	60	155	170	120	20	145	191	206	23	36	14
GKS07	70	70	190	210	150	25	180	235	255	28	45	18
GKS09	90	90	240	266	185	30	222	300	326	37	60	22
GKS11	105	105	290	325	225	40	270	363	398	43	73	26
GKS14	135	135	360	415	275	50	328	442	497	52	82	33

[1)] k_2 !

www.redukt0r-mex.ru

Dimensions

GKS□□-3M HAK

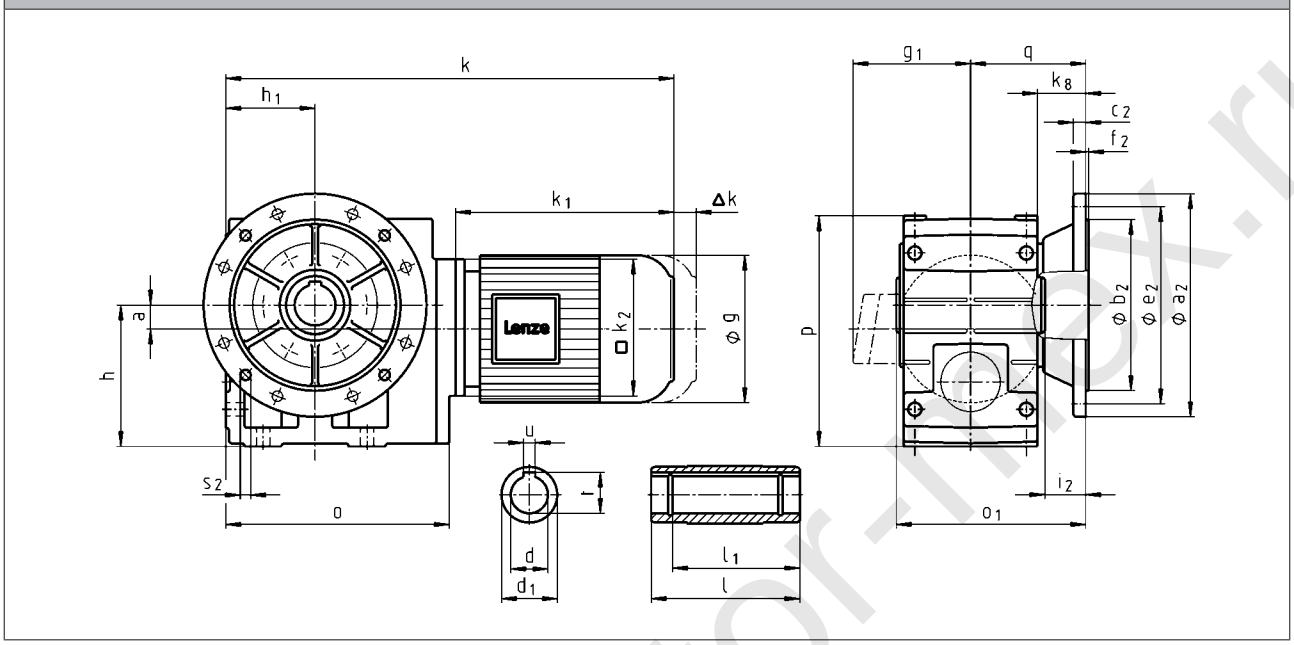

		063C11 063C12 063C31 063C32	063C42	071C11 071C13 071C31 071C32 071C33 071C42	080C11 080C13 080C31 080C32 080C33 080C42	090C11 090C31	090C32	100C12 100C31 100C32 100C41
g		123		139	156	176		194
g_1	MDEMAXX	100		109	150	157		166
	MDEMABR	107		118	132	137		147
k_1	MDEMAXX	187		207	224.5	274	248	309
k_2		120			145	180		
Δ k	MDEMABR	40		52	73	68		76
	MDFMAXX	128						109
	MDFMABR	170		165	183	181		170
		k						
	GKS04	399		419	441	501	475	
	GKS05		419	439	461	521	495	556
	GKS06		475	495	517	577	551	612
	GKS07				573	633	607	668
	GKS09					704	678	739
	GKS11							830

www.redukt0r-index.ru

		112C22 112C31	112C32 112C41	132C21 132C22 132C32	160C22	160C32	180C12 180C32	180C42	225C12 225C22
g		218		258	310		348		447
g_1	MDEMAXX	176		195	210		230		346
	MDEMABR	158		187	210		230		346
k_1	MDEMAXX	319	363	403	457.5	501.5	561	618	848
k_2		222		265	300				
Δ k	MDEMABR	90		109.5	105		113		
	MDFMAXX	102		115	149			155	213
	MDFMABR	183		201.5	179		215		213
		k							
GKS06		628	672						
GKS07		684	728	776	835	879			
GKS09		755	799	847	906	950	1010		
GKS11		846	890	938	997	1041	1101	1158	1388
GKS14		945	989	1037	1096	1140	1200	1257	1487

	a	h[1)]	h_1	k_8	o	p[1)]	q
GKS04	20	100	71	38.5	203	171	91
GKS05	23	125	80	40	232	205	103.5
GKS06	28	150	100	49	291	250	121.5
GKS07	34	190	120	65.5	354	310	155.5
GKS09	41	236	150	69.5	429	386	180.5
GKS11	54	300	185	70.5	527	485	205.5
GKS14	67	375	230	71.5	636	605	235.5

	d	d_1	l	l_1	u	t	i_2	o_1[1)]	a_2	b_2	c_2	e_2	f_2	s_2
	H7				JS9	+0,2				j7				
GKS04	25 30	45 45	115 115	100 100	8 8	28.3 33.3	33.5 33.5	148.5 148.5	160	110	10	130	3.5	4 x 9
GKS05	30 35	50 50	140 140	124 124	8 10	33.3 38.3	33 33	173.5 173.5	200	130	12	165	4	4 x 11
GKS06	40 45	65 65	160 160	140 140	12 14	43.3 48.8	42 41	201.5 201.5	200 250	180 130	12 15	165 215	3.5 4	4 x 11 4 x 14
GKS07	50 55	75 75	200 200	175 175	14 16	53.8 59.3	55 55	255.5 255.5	250 300	180 230	15 17	215 265	4 4	4 x 14 4 x 14
GKS09	60 70	95 95	240 240	210 210	18 20	64.4 74.9	60 60	300.5 300.5	350	250	18	300	4	4 x 17.5
GKS11	70 80	105 105	290 290	250 250	20 22	74.9 85.4	60 60	350.5 350.5	400 450	300 350	20 22	350 400	5 5	4 x 17.5 8 x 17.5
GKS14	100	135	350	305	28	106.4	60	410.5	450	350	22	400	5	8 x 18.5

[1)] k_2 !

www.redukto-mex.ru

Dimensions

GKS□□-3M V□R

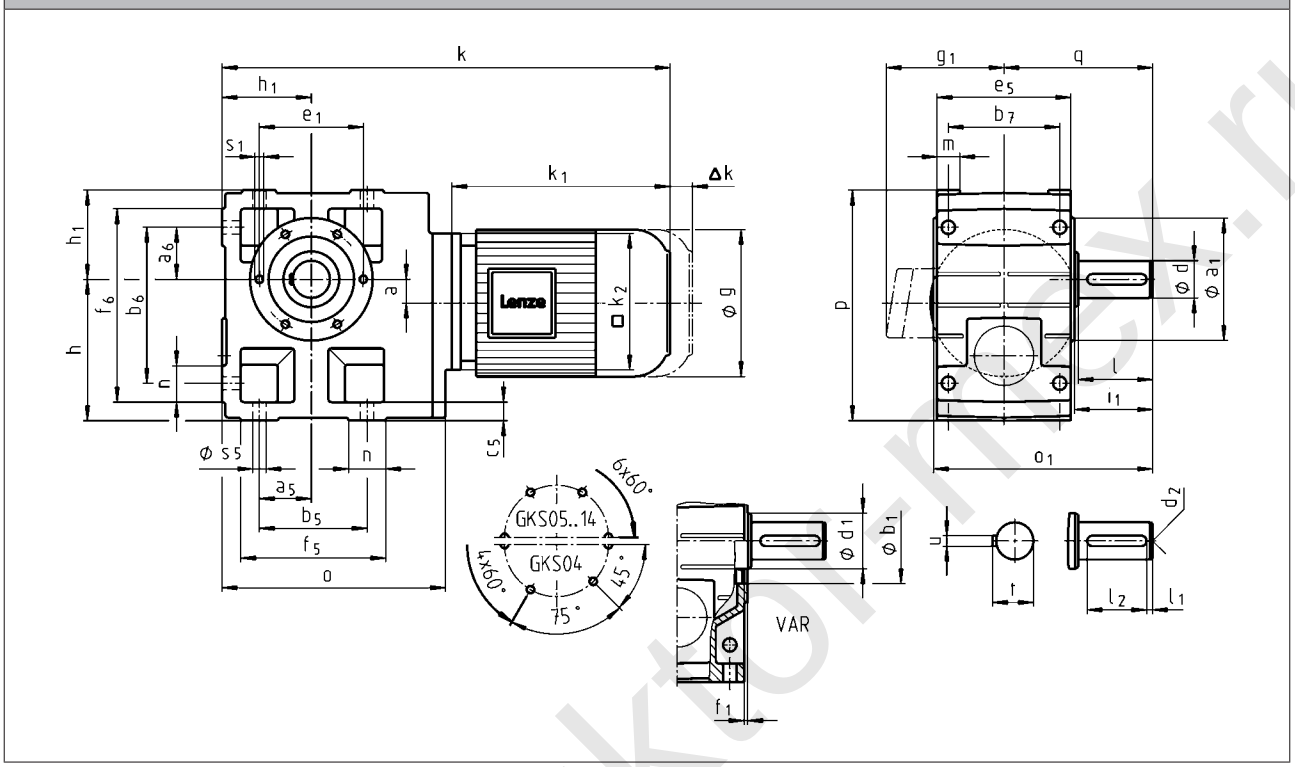

		063C11 063C12 063C31 063C32	063C42	071C11 071C13 071C31 071C32 071C33 071C42	080C11 080C13 080C31 080C32 080C33 080C42	090C11 090C31	090C32	100C12 100C31 100C32 100C41
g		123		139	156	176		194
g_1	MDEMAXX	100		109	150	157		166
	MDEMABR	107		118	132	137		147
k_1	MDEMAXX	187		207	224.5	274	248	309
k_2		120			145	180		
Δ k	MDEMABR	40		52	73	68		76
	MDFMAXX	128						109
	MDFMABR	170		165	183	181		170
		k						
	GKS04	399		419	441	501	475	
	GKS05		419	439	461	521	495	556
	GKS06		475	495	517	577	551	612
	GKS07				573	633	607	668
	GKS09					704	678	739
	GKS11							830

www.redukto-mex.ru

GKS helical-bevel gearbox

Technical data

		112C22 112C31	112C32 112C41	132C21 132C22 132C32	160C22	160C32	180C12 180C32	180C42	225C12 225C22
g		218		258	310		348		447
g_1	MDEMAXX	176		195	210		230		346
	MDEMABR	158		187	210		230		346
k_1	MDEMAXX	319	363	403	457.5	501.5	561	618	848
k_2		222		265	300				
Δ k	MDEMABR	90		109.5	105		113		
	MDFMAXX	102		115	149			155	213
	MDFMABR	183		201.5	179		215		213
		k							
	GKS06	628	672						
	GKS07	684	728	776	835	879			
	GKS09	755	799	847	906	950	1010		
	GKS11	846	890	938	997	1041	1101	1158	1388
	GKS14	945	989	1037	1096	1140	1200	1257	1487

	a	h[1)]	h_1	o	p[1)]	q
GKS04	20	100	71	203	171	107.5
GKS05	23	125	80	232	205	130
GKS06	28	150	100	291	250	160
GKS07	34	190	120	354	310	200
GKS09	41	236	150	429	386	240
GKS11	54	300	185	527	485	305
GKS14	67	375	230	636	605	375

	d	d	d_1	d_2	l	l_1	l_2	u	t	i_1	o_1[1)]	a_1	b_1	e_1	f_1	s_1
	k6	m6											H7			
GKS04	25		45	M10	50	6	40	8	28	52.5	162.5	104	75	90	3	M6x12
GKS05	30		45	M10	60	6	45	8	33	64	196.5	118	80	100	4	M8x15
GKS06	40		65	M16	80	7	63	12	43	85	235.5	140	100	120	4	M10x16
GKS07	50		75	M16	100	8	80	14	53.5	105	295.5	165	115	140	5	M12x18
GKS09		60	95	M20	120	8	100	18	64	125	355.5	205	145	175	6	M16x24
GKS11		80	105	M20	160	15	125	22	85	166	444.5	240	170	205	6	M20x32
GKS14		100	135	M24	200	18	160	28	106	207	543.5	290	170	250	6	M24x35

	a_5	a_6	b_5	b_6	b_7	c_5	e_5	f_5	f_6	m	n	s_5
GKS04	45	45	110	119	85	14	105	132	141	21	22	9
GKS05	47.5	47.5	115	140	105	17	115	144	169	21	29	11
GKS06	60	60	155	170	120	20	145	191	206	23	36	14
GKS07	70	70	190	210	150	25	180	235	255	28	45	18
GKS09	90	90	240	266	185	30	222	300	326	37	60	22
GKS11	105	105	290	325	225	40	270	363	398	43	73	26
GKS14	135	135	360	415	275	50	328	442	497	52	82	33

[1)] k_2 !

www.redukto-mex.ru

Dimensions

GKS□□-3M VAK

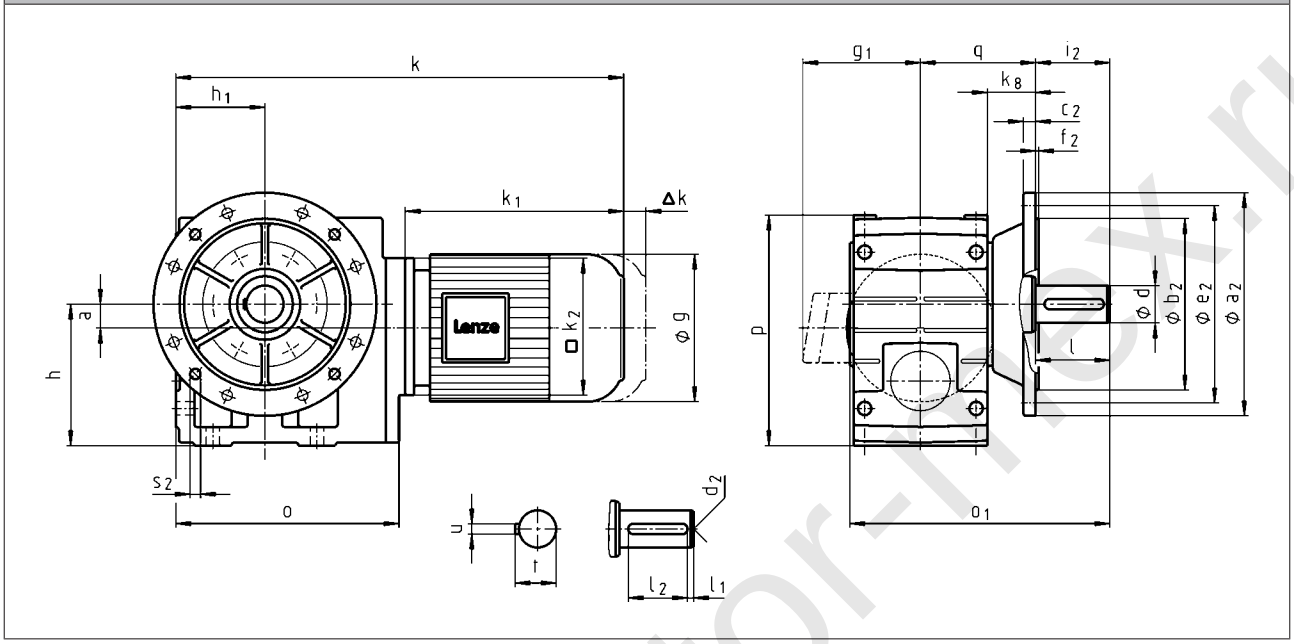

		063C11 063C12 063C31 063C32	063C42	071C11 071C13 071C31 071C32 071C33 071C42	080C11 080C13 080C31 080C32 080C33 080C42	090C11 090C31	090C32	100C12 100C31 100C32 100C41
g		123		139	156	176		194
g_1	MDEMAXX	100		109	150	157		166
	MDEMABR	107		118	132	137		147
k_1	MDEMAXX	187		207	224.5	274	248	309
k_2		120			145	180		
Δ k	MDEMABR	40		52	73	68		76
	MDFMAXX	128						109
	MDFMABR	170		165	183	181		170
		k						
	GKS04	399		419	441	501	475	
	GKS05		419	439	461	521	495	556
	GKS06		475	495	517	577	551	612
	GKS07				573	633	607	668
	GKS09					704	678	739
	GKS11							830

www.redukt-or-flex.ru

		112C22 112C31	112C32 112C41	132C21 132C22 132C32	160C22	160C32	180C12 180C32	180C42	225C12 225C22
g		218		258	310		348		447
g_1	MDEMAXX	176		195	210		230		346
	MDEMABR	158		187	210		230		346
k_1	MDEMAXX	319	363	403	457.5	501.5	561	618	848
k_2		222		265	300				
Δ k	MDEMABR	90		109.5	105		113		
	MDFMAXX	102		115	149			155	213
	MDFMABR	183		201.5	179		215		213
		k							
GKS06		628	672						
GKS07		684	728	776	835	879			
GKS09		755	799	847	906	950	1010		
GKS11		846	890	938	997	1041	1101	1158	1388
GKS14		945	989	1037	1096	1140	1200	1257	1487

	a	h[1)]	h_1	k_8	o	p[1)]	q
GKS04	20	100	71	38.5	203	171	91
GKS05	23	125	80	40	232	205	103.5
GKS06	28	150	100	49	291	250	121.5
GKS07	34	190	120	65.5	354	310	155.5
GKS09	41	236	150	69.5	429	386	180.5
GKS11	54	300	185	70.5	527	485	205.5
GKS14	67	375	230	71.5	636	605	235.5

	d	d	d_2	l	l_1	l_2	u	t	i_2	o_1[1)]	a_2	b_2	c_2	e_2	f_2	s_2
	k6	m6										j7				
GKS04	25		M10	50	6	40	8	28	50	195.5	160	110	10	130	3.5	4 x 9
GKS05	30		M10	60	6	45	8	33	60	229.5	200	130	12	165	4	4 x 11
GKS06	40		M16	80	7	63	12	43	80	276.5	250	180	15	215	4	4 x 14
GKS07	50		M16	100	8	80	14	53.5	100	350.5	250 300	180 230	15 17	215 265	4 4	4 x 14 4 x 14
GKS09		60	M20	120	8	100	18	64	120	415.5	350	250	18	300	4	4 x 17.5
GKS11		80	M20	160	15	125	22	85	160	504.5	400 450	300 350	20 22	350 400	5 5	4 x 17.5 8 x 17.5
GKS14		100	M24	200	18	160	28	106	200	603.5	450	350	22	400	5	8 x 18.5

[1)] k_2 !

www.reduktor-mex.ru

Dimensions

GKS□□-4M H□R

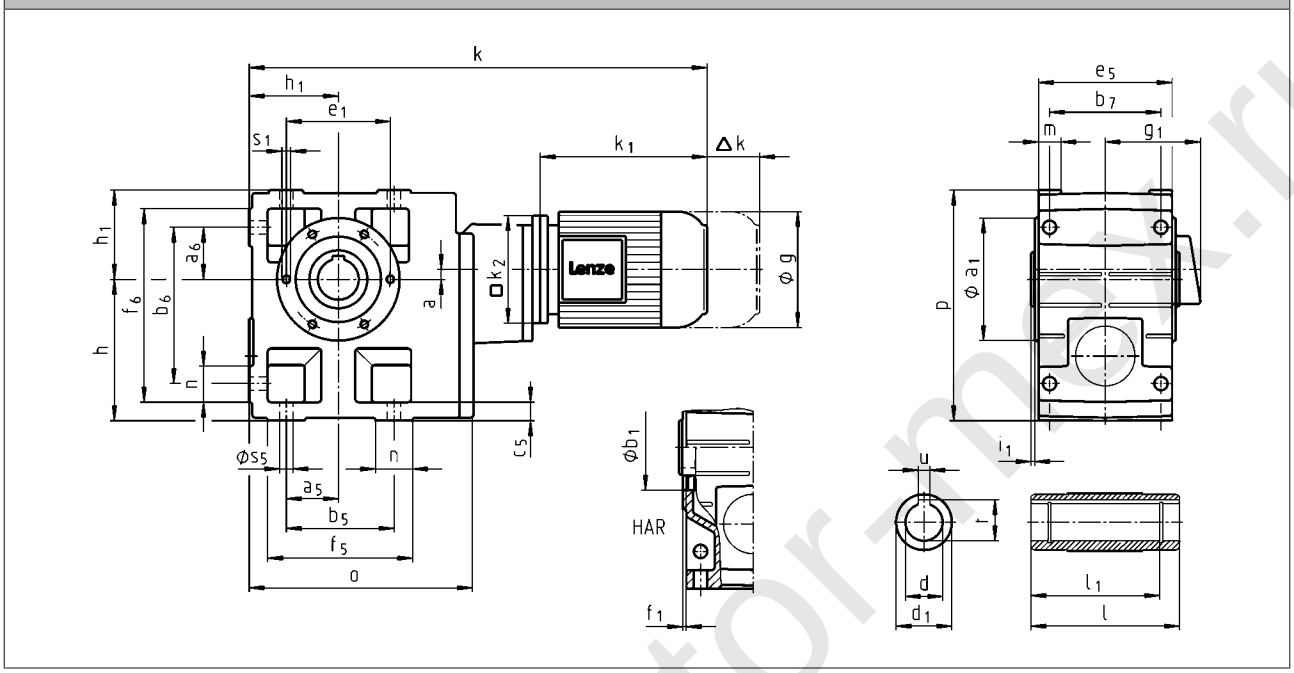

		063C11 063C12 063C31 063C32	063C42	071C11 071C13 071C31 071C32 071C33	071C42	080C11	080C13 080C31 080C32 080C33 080C42	090C11 090C31	090C32
g		123		139		156		176	
g_1	MDEMAXX	100		109		150		157	
	MDEMABR	107		118		132		137	
k_1	MDEMAXX	187		207		224.5		274	248
k_2		120				145		180	
Δ k	MDEMABR	40		52		73		68	
	MDFMAXX	128							
	MDFMABR	170		165		183		181	
		k							
	GKS05	495		515		538			
	GKS06	568		588		611		670	
	GKS07		635	655		678		737	711
	GKS09		724	744		767		826	800
	GKS11					877		936	910
	GKS14							1069	1043

www.redukto-max.ru

		100C12 100C31	100C32	100C41	112C22 112C31	112C32 112C41	132C21 132C22 132C32	160C22	160C32	180C12
g		194			218		258	310		348
g_1	MDEMAXX	166			176		195	210		230
	MDEMABR	147			158		187	210		230
k_1	MDEMAXX	309			319	363	403	457.5	501.5	561
k_2		180			222		265	300		
Δ k	MDEMABR	76			90		109.5	105		113
	MDFMAXX	109			102		115	149		
	MDFMABR	170			183		201.5	179		215
		k								
GKS07		772		772						
GKS09		861			877	921				
GKS11		971			987	1031	1079			
GKS14		1104			1120	1164	1212	1272	1316	1375

	a	h	h_1	o	p
GKS05	13	125	80	226	205
GKS06	8	150	100	288	250
GKS07	11	190	120	350.5	310
GKS09	15	236	150	426	386
GKS11	16	300	185	523	485
GKS14	22	375	230	632	605

	d	d_1	l	l_1	u	t	i_1	a_1	b_1	e_1	f_1	s_1
	H7				JS9	+0,2			H7			
GKS05	30 35	50 50	140 140	124 124	8 10	33.3 38.3	4 4	118	80	100	4	M8x15
GKS06	40 45	65 65	160 160	140 140	12 14	43.3 48.8	5 5	140	100	120	4	M10x16
GKS07	50 55	75 75	200 200	175 175	14 16	53.8 59.3	5 5	165	115	140	5	M12x18
GKS09	60 70	95 95	240 240	210 210	18 20	64.4 74.9	5 5	205	145	175	6	M16x24
GKS11	70 80	105 105	290 290	250 250	20 22	74.9 85.4	6 6	240	170	205	6	M20x32
GKS14	100	135	350	305	28	106.4	7	290	170	250	6	M24x35

	a_5	a_6	b_5	b_6	b_7	c_5	e_5	f_5	f_6	m	n	s_5
GKS05	47.5	47.5	115	140	105	17	115	144	169	21	29	11
GKS06	60	60	155	170	120	20	145	191	206	23	36	14
GKS07	70	70	190	210	150	25	180	235	255	28	45	18
GKS09	90	90	240	266	185	30	222	300	326	37	60	22
GKS11	105	105	290	325	225	40	270	363	398	43	73	26
GKS14	135	135	360	415	275	50	328	442	497	52	82	33

www.redukt0r-mex.ru

Dimensions

GKS□□-4M HAK

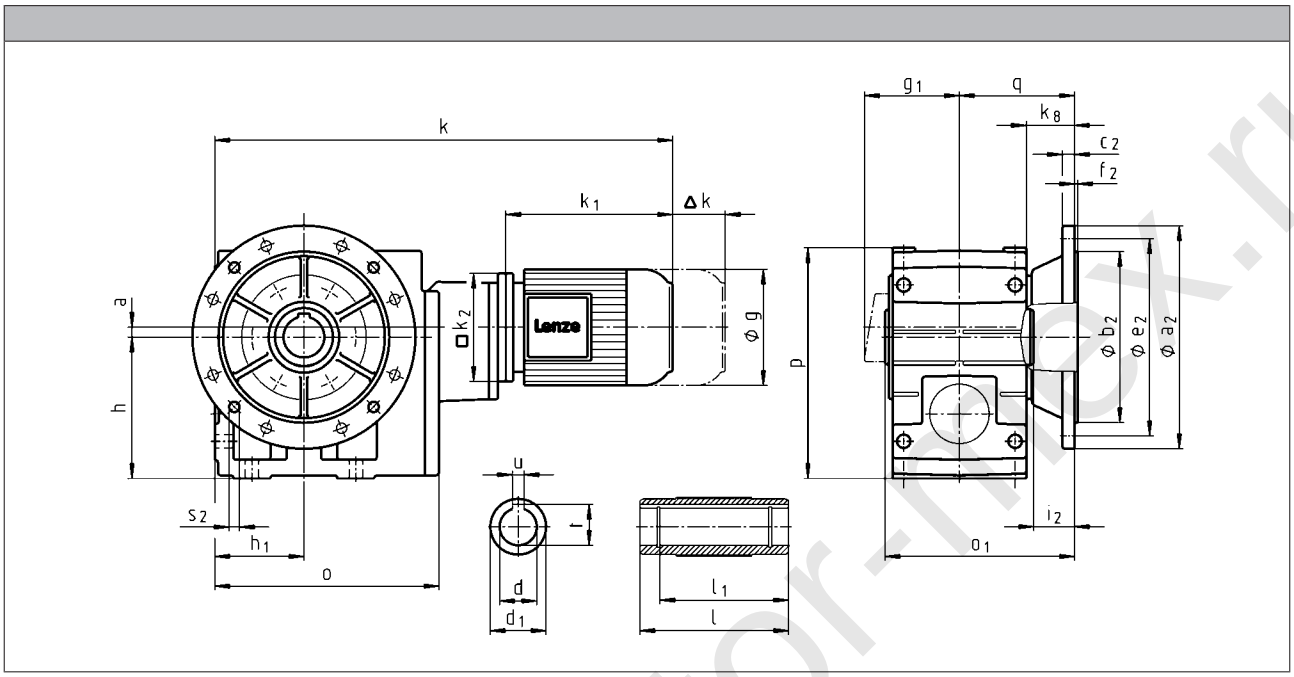

		063C11 063C12 063C31 063C32	063C42	071C11 071C13 071C31 071C32 071C33	071C42	080C11	080C13 080C31 080C32 080C33 080C42	090C11 090C31	090C32
g		123		139		156		176	
g_1	MDEMAXX	100		109		150		157	
	MDEMABR	107		118		132		137	
k_1	MDEMAXX	187		207		224.5		274	248
k_2		120				145		180	
Δ k	MDEMABR	40		52		73		68	
	MDFMAXX	128							
	MDFMABR	170		165		183		181	
		k							
	GKS05	495		515		538			
	GKS06	568		588		611		670	
	GKS07		635	655		678		737	711
	GKS09		724	744		767		826	800
	GKS11					877		936	910
	GKS14							1069	1043

www.redukt or-mex.ru

		100C12 100C31	100C32	100C41	112C22 112C31	112C32 112C41	132C21 132C22 132C32	160C22	160C32	180C12
g		194			218		258	310		348
g_1	MDEMAXX	166			176		195	210		230
	MDEMABR	147			158		187	210		230
k_1	MDEMAXX	309			319	363	403	457.5	501.5	561
k_2		180			222		265	300		
Δ k	MDEMABR	76			90		109.5	105		113
	MDFMAXX	109			102		115	149		
	MDFMABR	170			183		201.5	179		215
		k								
GKS07		772		772						
GKS09		861			877	921				
GKS11		971			987	1031	1079			
GKS14		1104			1120	1164	1212	1272	1316	1375

	a	h	h_1	k_8	o	p	q
GKS05	13	125	80	40	226	205	103.5
GKS06	8	150	100	49	288	250	121.5
GKS07	11	190	120	65.5	350.5	310	155.5
GKS09	15	236	150	69.5	426	386	180.5
GKS11	16	300	185	70.5	523	485	205.5
GKS14	22	375	230	71.5	632	605	235.5

	d	d_1	l	l_1	u	t	i_2	o_1	a_2	b_2	c_2	e_2	f_2	s_2
	H7				JS9	+0,2				j7				
GKS05	30 35	50 50	140 140	124 124	8 10	33.3 38.3	33 33	173.5 173.5	200	130	12	165	4	4 x 11
GKS06	40 45	65 65	160 160	140 140	12 14	43.3 48.8	42 41	201.5 201.5	200 250	180 130	12 15	165 215	3.5 4	4 x 11 4 x 14
GKS07	50 55	75 75	200 200	175 175	14 16	53.8 59.3	55 55	255.5 255.5	250 300	180 230	15 17	215 265	4 4	4 x 14 4 x 14
GKS09	60 70	95 95	240 240	210 210	18 20	64.4 74.9	60 60	300.5 300.5	350	250	18	300	4	4 x 17.5
GKS11	70 80	105 105	290 290	250 250	20 22	74.9 85.4	60 60	350.5 350.5	400 450	300 350	20 22	350 400	5 5	4 x 17.5 8 x 17.5
GKS14	100	135	350	305	28	106.4	60	410.5	450	350	22	400	5	8 x 18.5

www.redukTor-mex.ru

Dimensions

GKS□□-4M V□R

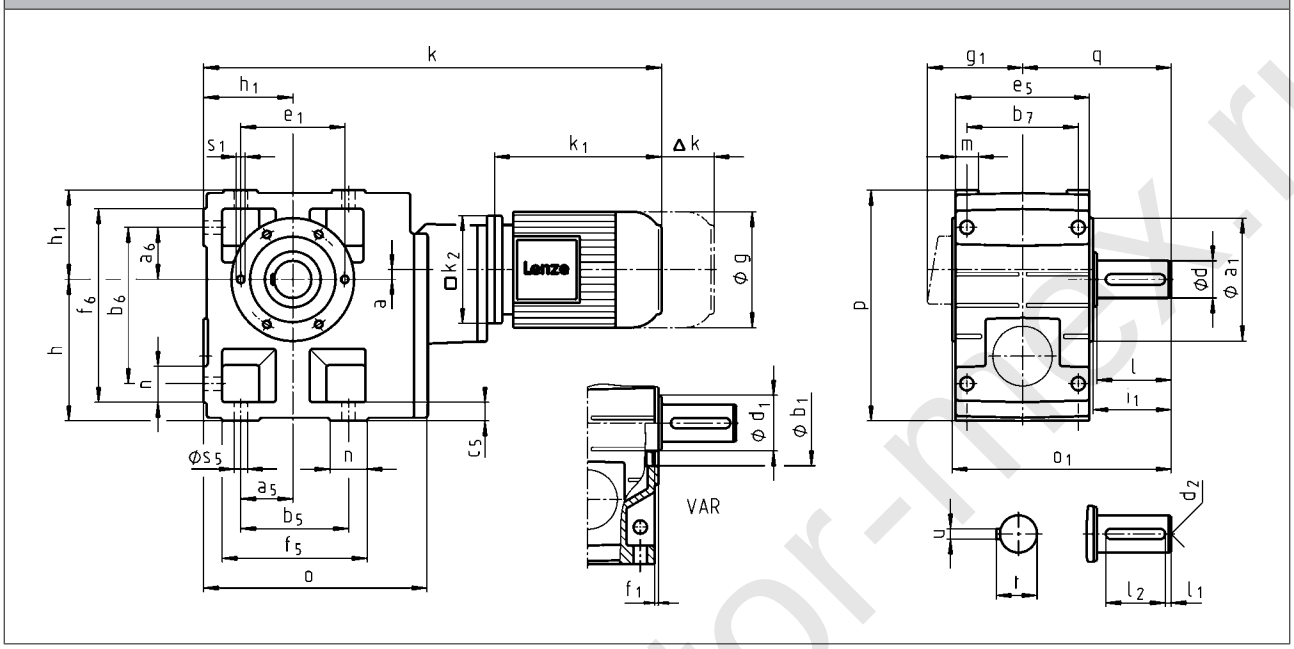

		063C11 063C12 063C31 063C32	063C42	071C11 071C13 071C31 071C32 071C33	071C42	080C11	080C13 080C31 080C32 080C33 080C42	090C11 090C31	090C32
g		123		139		156		176	
g_1	MDEMAXX	100		109		150		157	
	MDEMABR	107		118		132		137	
k_1	MDEMAXX	187		207		224.5		274	248
k_2		120				145		180	
Δ k	MDEMABR	40		52		73		68	
	MDFMAXX	128							
	MDFMABR	170		165		183		181	
		k							
	GKS05	495		515		538			
	GKS06	568		588		611		670	
	GKS07		635	655		678		737	711
	GKS09		724	744		767		826	800
	GKS11					877		936	910
	GKS14							1069	1043

www.redukt or-mex.ru

		100C12 100C31	100C32	100C41	112C22 112C31	112C32 112C41	132C21 132C22 132C32	160C22	160C32	180C12
g		194			218		258	310		348
g_1	MDEMAXX	166			176		195	210		230
	MDEMABR	147			158		187	210		230
k_1	MDEMAXX	309			319	363	403	457.5	501.5	561
k_2		180			222		265	300		
Δ k	MDEMABR	76			90		109.5	105		113
	MDFMAXX	109			102		115	149		
	MDFMABR	170			183		201.5	179		215
		k								
GKS07		772		772						
GKS09		861			877	921				
GKS11		971			987	1031	1079			
GKS14		1104			1120	1164	1212	1272	1316	1375

	a	h	h_1	o	p	q
GKS05	13	125	80	226	205	130
GKS06	8	150	100	288	250	160
GKS07	11	190	120	350.5	310	200
GKS09	15	236	150	426	386	240
GKS11	16	300	185	523	485	305
GKS14	22	375	230	632	605	375

	d	d	d_1	d_2	l	l_1	l_2	u	t	i_1	o_1	a_1	b_1	e_1	f_1	s_1
	k6	m6											H7			
GKS05	30		45	M10	60	6	45	8	33	64	196.5	118	80	100	4	M8x15
GKS06	40		65	M16	80	7	63	12	43	85	235.5	140	100	120	4	M10x16
GKS07	50		75	M16	100	8	80	14	53.5	105	295.5	165	115	140	5	M12x18
GKS09		60	95	M20	120	8	100	18	64	125	355.5	205	145	175	6	M16x24
GKS11		80	105	M20	160	15	125	22	85	166	444.5	240	170	205	6	M20x32
GKS14		100	135	M24	200	18	160	28	106	207	543.5	290	170	250	6	M24x35

	a_5	a_6	b_5	b_6	b_7	c_5	e_5	f_5	f_6	m	n	s_5
GKS05	47.5	47.5	115	140	105	17	115	144	169	21	29	11
GKS06	60	60	155	170	120	20	145	191	206	23	36	14
GKS07	70	70	190	210	150	25	180	235	255	28	45	18
GKS09	90	90	240	266	185	30	222	300	326	37	60	22
GKS11	105	105	290	325	225	40	270	363	398	43	73	26
GKS14	135	135	360	415	275	50	328	442	497	52	82	33

www.redukto-mex.ru

Dimensions

GKS□□-4M VAK

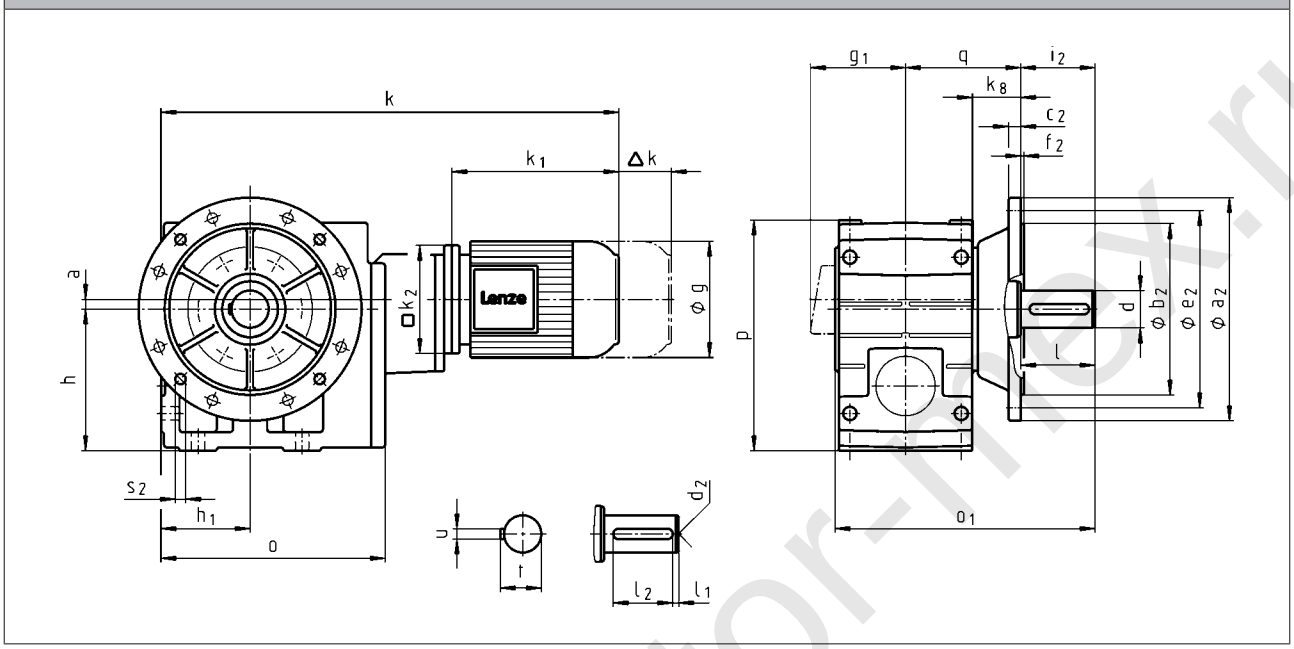

		063C11 063C12 063C31 063C32	063C42	071C11 071C13 071C31 071C32 071C33	071C42	080C11	080C13 080C31 080C32 080C33 080C42	090C11 090C31	090C32
g		123		139		156		176	
g_1	MDEMAXX	100		109		150		157	
	MDEMABR	107		118		132		137	
k_1	MDEMAXX	187		207		224.5		274	248
k_2		120				145		180	
Δ k	MDEMABR	40		52		73		68	
	MDFMAXX	128							
	MDFMABR	170		165		183		181	
		k							
	GKS05	495		515		538			
	GKS06	568		588		611		670	
	GKS07		635	655		678		737	711
	GKS09		724	744		767		826	800
	GKS11					877		936	910
	GKS14							1069	1043

www.redukto-r-nex.ru

		100C12 100C31	100C32	100C41	112C22 112C31	112C32 112C41	132C21 132C22 132C32	160C22	160C32	180C12
g		194			218		258	310		348
g_1	MDEMAXX	166			176		195	210		230
	MDEMABR	147			158		187	210		230
k_1	MDEMAXX	309			319	363	403	457.5	501.5	561
k_2		180			222		265	300		
Δ k	MDEMABR	76			90		109.5	105		113
	MDFMAXX	109			102		115	149		
	MDFMABR	170			183		201.5	179		215
		k								
GKS07		772		772						
GKS09		861			877	921				
GKS11		971			987	1031	1079			
GKS14		1104			1120	1164	1212	1272	1316	1375

	a	h	h_1	k_8	o	p	q
GKS05	13	125	80	40	226	205	103.5
GKS06	8	150	100	49	288	250	121.5
GKS07	11	190	120	65.5	350.5	310	155.5
GKS09	15	236	150	69.5	426	386	180.5
GKS11	16	300	185	70.5	523	485	205.5
GKS14	22	375	230	71.5	632	605	235.5

	d	d	d_2	l	l_1	l_2	u	t	i_2	o_1	a_2	b_2	c_2	e_2	f_2	s_2
	k6	m6										j7				
GKS05	30		M10	60	6	45	8	33	60	229.5	200	130	12	165	4	4 x 11
GKS06	40		M16	80	7	63	12	43	80	276.5	250	180	15	215	4	4 x 14
GKS07	50		M16	100	8	80	14	53.5	100	350.5	250 300	180 230	15 17	215 265	4 4	4 x 14 4 x 14
GKS09		60	M20	120	8	100	18	64	120	415.5	350	250	18	300	4	4 x 17.5
GKS11		80	M20	160	15	125	22	85	160	504.5	400 450	300 350	20 22	350 400	5 5	4 x 17.5 8 x 17.5
GKS14		100	M24	200	18	160	28	106	200	603.5	450	350	22	400	5	8 x 18.5

www.redukt0r-mex.ru

www.reduktor-mex.ru

Hollow shaft with shrink disc

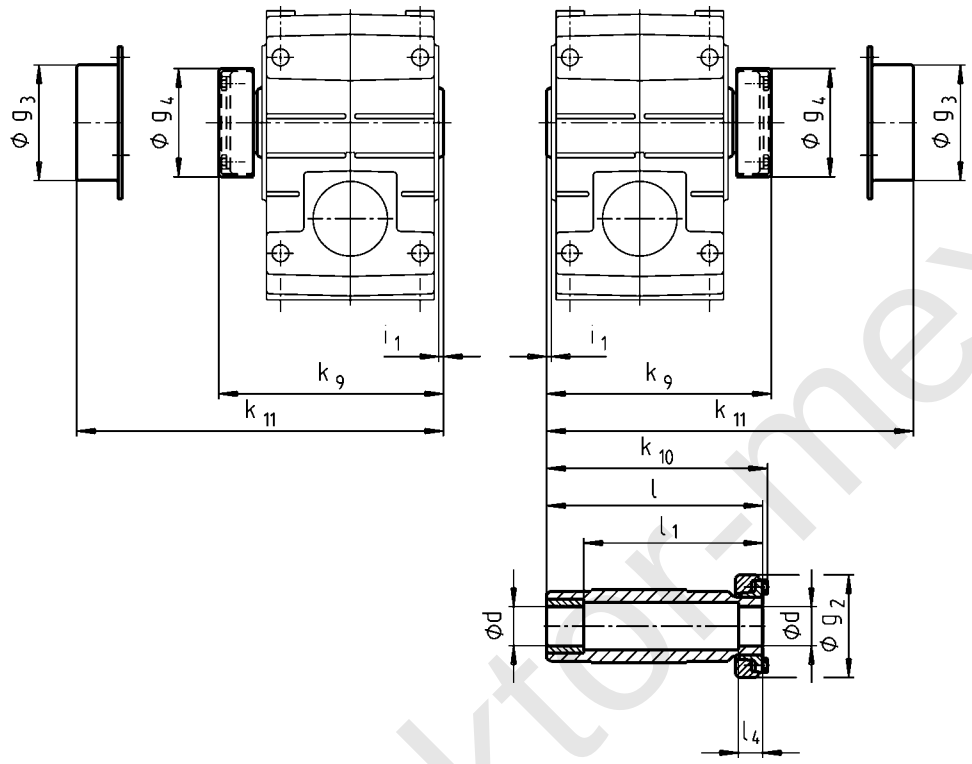

	d	g_2	g_3	g_4	i_1	k_9	k_{10}	k_{11}	l	l_1	l_4
	h6										
GKS04	25 30	72	79	76	2.5	150	148	154	142	122	26
GKS05	35	80	90	84	4.0	176	174	179	168	148	28
GKS06	40	90	100	94		202	200	204	194	164	30
GKS07	50	110	124	116	5.0	241	238	244	232	192	26
GKS09	65	141	159	147		288	285	287	278	228	30
GKS11	80	170	191	176	6.0	347	344	349	338	238	42
GKS14	100	215	253	221	7.0	418	415	421	407	307	55

- ► Output flange and hollow shaft with shrink disc (output version SAK) are not possible in the same location. For additional dimensions see output version H□□.
- ► Ensure that the strength of the machine shaft material is adequate in shrink disc designs.
  When using typical steels (e.g. C45, 42CrMo4), the torques listed in the selection tables can be used without restriction.
  Please consult us if you wish to use material that is considerably weaker. Medium surface roughness Rz must not exceed 15 µm (turning is sufficient).

www.reduktor-mex.ru

Mounting set for hollow shaft circlip:
Proposed design for auxiliary tools

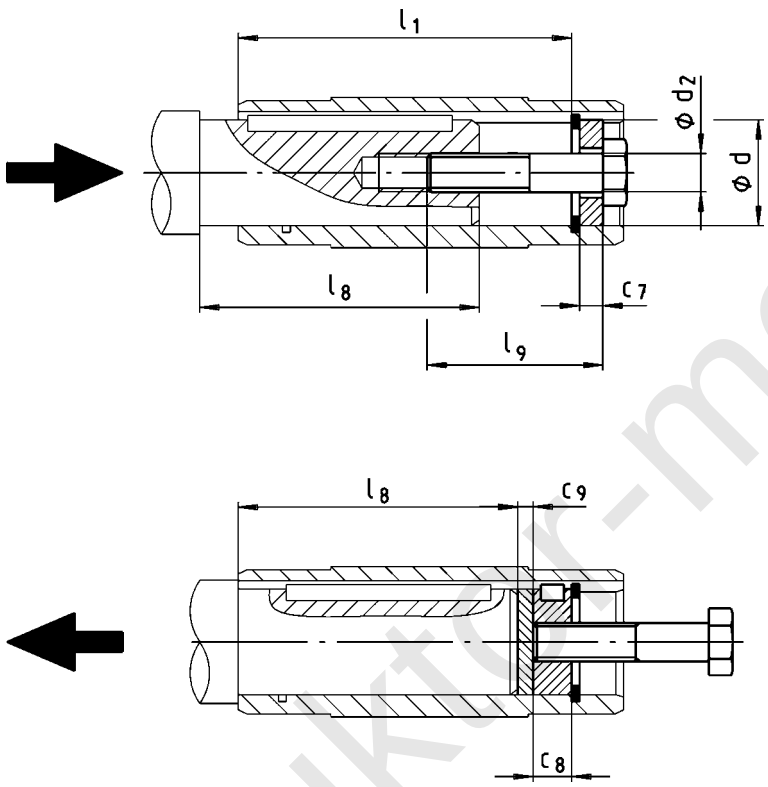

	d	l_1	d_2	l_9	c_7	c_8	c_9	$l_{8, max}$
	H7							
GKS04	25 30	100	M10	40	5	10	3	85
					6			
GKS05	30 35	124						107
			M12	50	7	12		
GKS06	40 45	140	M16	60	8	16	4	118
					9			
GKS07	50 55	175			10		5	148
			M20	80	11	20		
GKS09	60 70	210			13			182
					14			
GKS11	70 80	250					6	221
					16			
GKS14	100	305	M24	100	20	24	8	270

www.redukter-mex.ru

Hoseproof hollow shaft cover

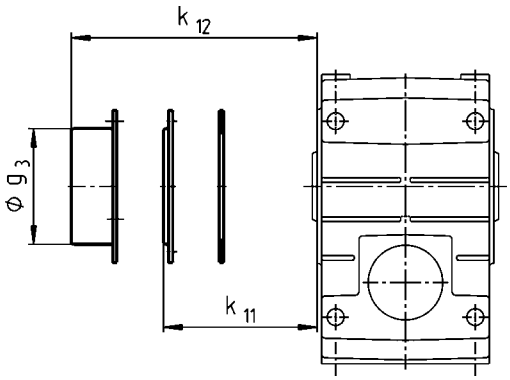

► Cover including gasket

	k_{11}	k_{12}	g_3
GKS04	9		
GKS05	10		
GKS06	11		
GKS07			
GKS09		54	159
GKS11		67	191
GKS14		80	253

www.reduktor-mex.ru

Gearbox with 2nd output shaft end

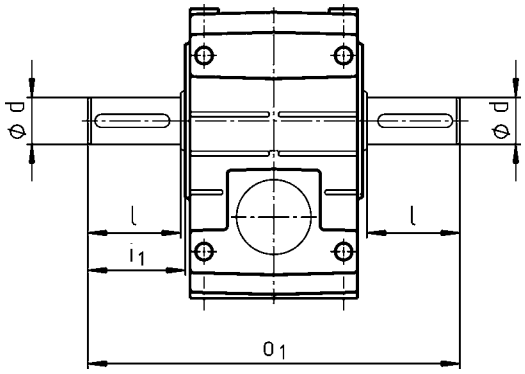

	d	d	l	i_1	o_1
	k6	m6			
GKS04	25		50	52.5	215
GKS05	30		60	64.0	260
GKS06	40		80	85.0	320
GKS07	50		100	105.0	400
GKS09		60	120	125.0	480
GKS11		80	160	166.0	610
GKS14		100	200	207.0	750

www.redukto-mex.ru

Torque plate on threaded pitch circle

In position 3

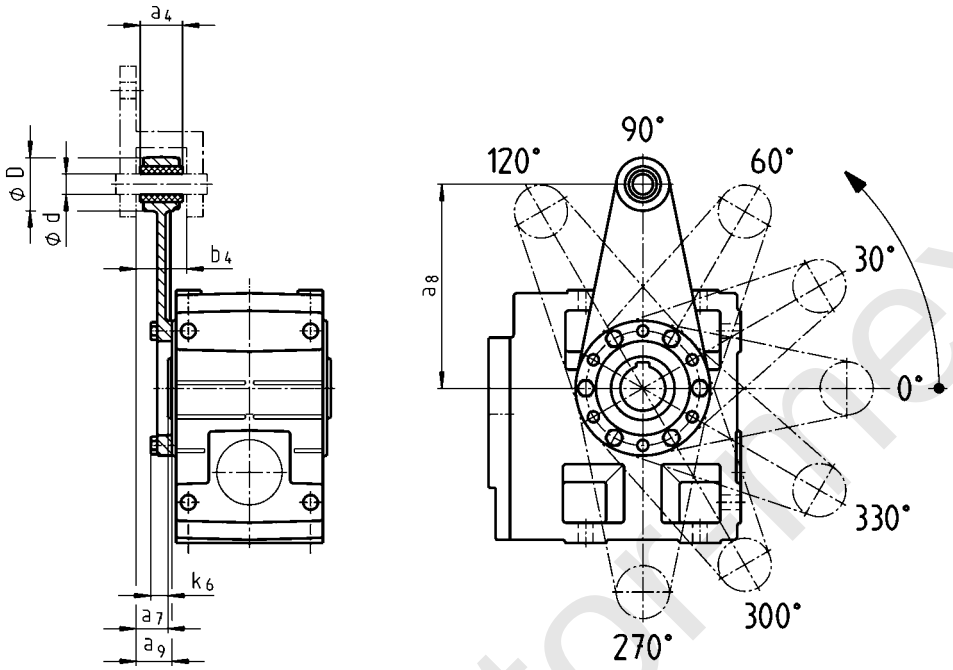

In position 5

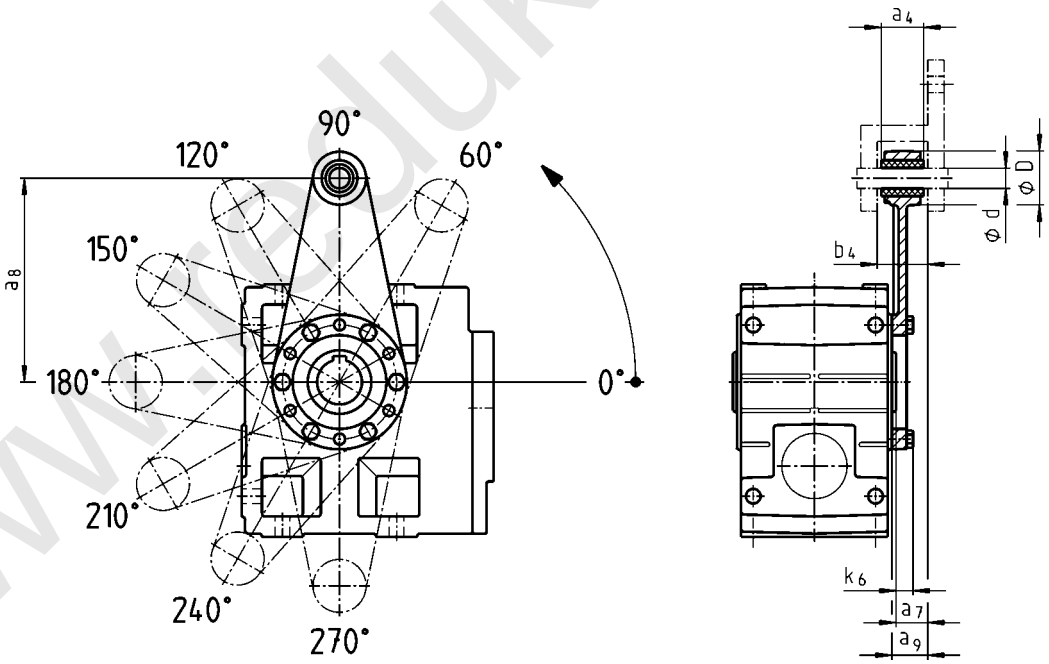

	a_4	a_7	a_8	a_9	b_4	d	D	k_6
GKS04	30	24.0	130	26.5	34.5	12	35	16
GKS05	34	23.5	160	27.5	38.5	16	45	15
GKS06	40	28.0	200	33.0	44.5	20	50	18
GKS07	46	32.5	250	37.5	50.5	25	65	21

www.redukto-mex.ru

Torque plate at housing foot

In position 2, 4 or 6

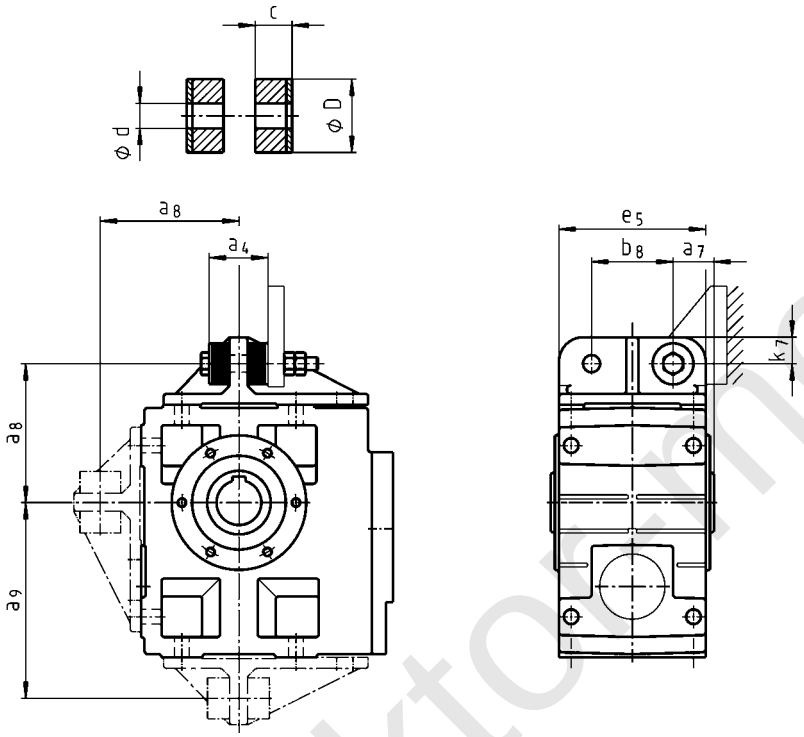

	a_4	a_7	a_8	a_9	b_8	c	d	D	e_5	k_7
GKS04	41	27.5	106	135.0	60	14.5	11	30	100	20
GKS05	45	35.0	115	160.0	70	15.0	13	40	127	25
GKS06	72	40.0	145	195.0	80	27.0	17	50	145	28
GKS07	78	50.0	170	240.0	100	28.0	21	60	180	35
GKS09	86	60.0	214	300.0	120	29.0	26	72	222	46
GKS11	94	72.5	260	375.0	145	30.0	31	92	270	55
GKS14	100	85.0	320	465.0	180		39	110	328	70

www.redukto-mex.ru